Pedal-controller P 10 / P 11

Type P10-1ZP-B…

The pedal-controller P 10 / P 11 is a rugged switching device to IEC/EN 60947-5-1 for electro-hydraulic applications. The modular design enables the switching device to be used universally. The P 10 / P 11 is resistant to oil, maritime climate, ozone and UV radiation.

Contact complement 0,5 A 110 V AC 15 or 1,5 A 24 V DC 13
I min > 0,2 mA 2 V DC 12 Gold plated for max. load of 0,12 Watt (standard)

Mechanical life	8 million (operating cycles)
Permissible ambient temperature	Operation -40° C to +60° C Storage -50° C to +80° C
Climate resistance	
Damp heat constant	IEC 60068-2-78
Damp heat cyclic	IEC 60068-2-30
Degree of protection front	IP 54 IEC/EN 60529

Technical data look catalog 5/100

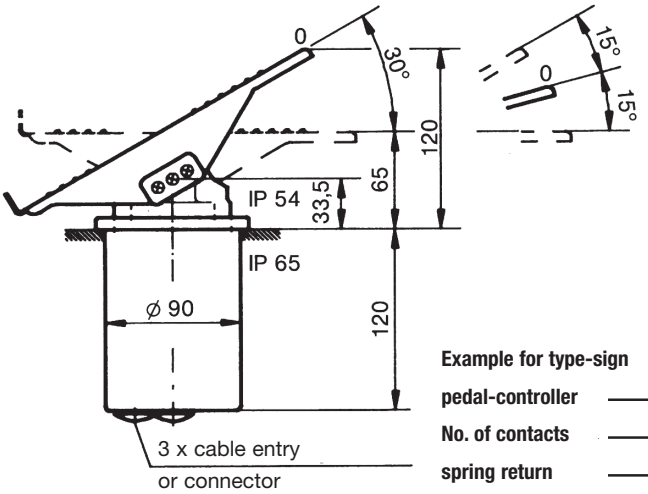

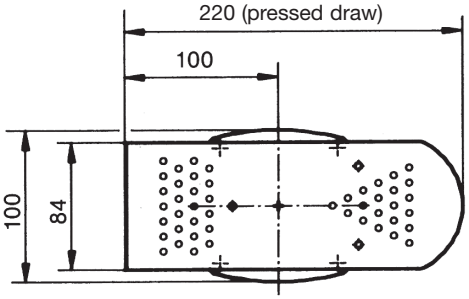

View at the top

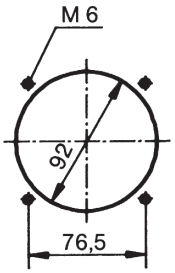

Hole pattern

Example for type-sign **P10 -1 Z P -B- -X- A01 P224**

- **P10** — **pedal-controller**
- **-1** — **No. of contacts**
- **Z** — **spring return**
- **P** — **Potentiometer e.t.c.**
- **-B-** — **cover housing**
- **-X-** — **speacial please describe**
- **A01** — **Arrangement**
- **P224** — **Potentiomter description**

Pos.		Type-expansion		Weight gramm	Type	Price EURO
1	Pedal-controller standard version			1300	P 10	
2	Pedal-controller centre position notching max. 1-0-1			1300	P 11	
3	Switching sequence max. 0-3					
7	No. of contacts (microswitch) max. 3 pcs.			20	1	
8	Switching program according contact-arrangement MS look catalog 5/001	A…		40	2	
9	or to your contact-arrangement			60	3	
11	Spring return in 0-position			30	Z	
12	Friction brake adjustable			30	R	
15	Potentiometer e.t.c. with mounted Conductive-plastic potentiometer T 362 linear with centre tap life 10^7 switching cycles Resistance 2 x 5 kOhm 0,5 Watt wiper current max. 1 mA	P224 □		70	P	
16	Prepared for mounting potentiometershaft 6 mm adjusting angle 120°	P…			(P)	
17	More potentiometer e.t.c. look catalog 1/240ff					
18	Impedance converter Input ± 15 Volt, output ± 10 Volt / 5 mA	I…			I	
20	Cover housing			300	B	
21	Filter plug M 20 for air-condition			20		
22	Cable entry M 20			30		
23	Plug in socket 14-pole female insert CPC 17 wired			150		
24	Connector 14-pole male insert CPC 17 unwired			150		
25	Wiring plug in socket or connector each wired-connection					
26	Electronic (Amplifier, Profi-Bus, CAN-Bus) look catalog 3/510ff	E…				